AZUM012

HEAT NO.	NO.	ITEM	MATERIAL	SIZE 1	SIZE 2	THICKNESS 1	THICKNESS 2	TYPE	Q'TY (MM,EA)	WEIGHT (KG) UNIT(M,EA)	WEIGHT (KG) TOTAL	REMARK
	1	PIPE-SMLS	API 5L-B PSL.1	6"		S/40			6000	28.3	169.8	-
	2	PIPE-SMLS	API 5L-B PSL.1	6"		S/40			6000	28.3	169.8	-
	3	PAD PLATE(1-Ø6)	A36	183	220	PL6			1	1.9	1.9	00GHA40BR003_UAY00Y-B1-BQ001ST
	4	PAD PLATE(1-Ø6)	A36	183	220	PL6			1	1.9	1.9	00GHA40BR003_UAY00Y-B1-BQ002ST
	5	PAD PLATE(1-Ø6)	A36	183	220	PL6			1	1.9	1.9	00GHA40BR003_UAY00Y-B1-BQ003ST
										TOTAL W.T (KG)	345.3	END TO END (MM) 12000

PREHEAT CHECK(Min. °C)

Dimensional & Visual Inspection

☐ Accept ☐ Reject

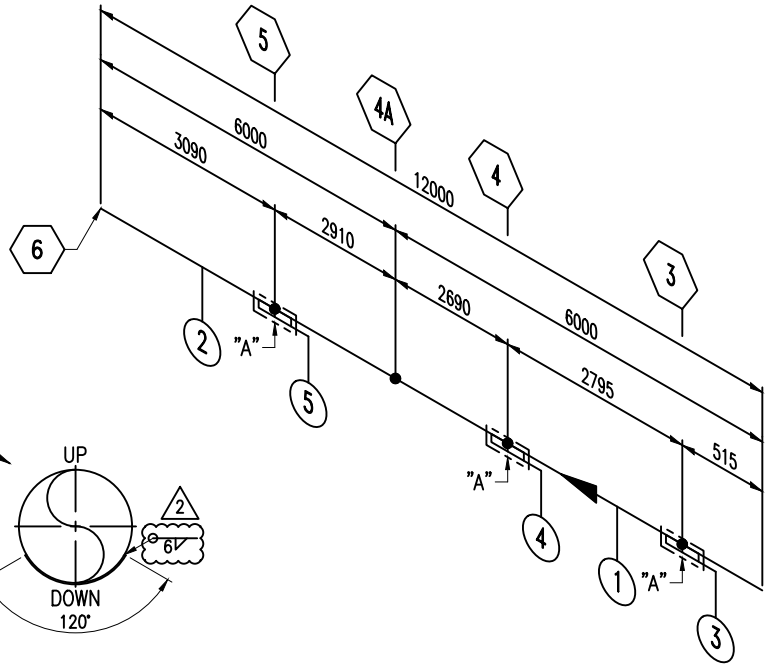

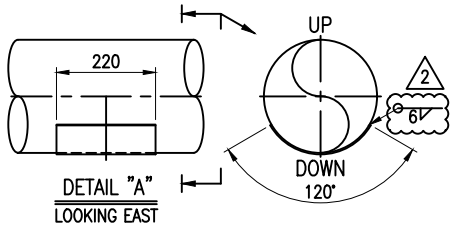

DETAIL "A"
LOOKING EAST

NOTES
1. SEE FABRICATION STANDARD DOCUMENT NO.AZU-FAB-STD-001 FOR SPOOL FABRICATION.
2. ALL DIMENSIONS ARE IN MILLIMETERS UNLESS OTHERWISE SPECIFIED.
3. ALL BUTTWELDINGS AND O-LET WELDINGS ARE FULL PENETRATION WELD.
4. FFW=FIELD FITTED WELD
5. ⊕ : ORIENTATION OF LONGITUDINAL WELD SEAM FOR WELDED PIPE

REV.	DATE	DESCRIPTION	PREPARED	CHECKED	REVIEWED	APPROVED
2	2025.01.13	REVISED AS PER MARKED	J.G.LIM	J.S.KIM	G.J.KANG	G.H.CHO
1	2024.12.24	REVISED AS PER MARKED	J.G.LIM	J.S.KIM	G.J.KANG	G.H.CHO
0	2024.10.10	FIRST ISSUE	J.G.LIM	J.S.KIM	G.J.KANG	G.H.CHO

APPLICABLE CODE		ASME B31.1(2022)	CODE JURISDICTION	NBEP
DESIGN	PRESS.	10 bar (g)	INSULATION(Y/N)	N
	TEMP.	60 °C	END BEVEL TYPE	A
COATING		26-21-00-PRO-MM-0802-001	STAMP(Y/N)	N
HYDROSTATIC TEST(Y/N)		N	TEST PRESSURE	- bar (g)

Project: UTE Azulão 950 MW

Customer: elecnor

Manufacturer: SEONGHWA

Title: PREFABRICATED PIPE SPOOL DRAWING
SERVICE WATER SYSTEM

SCALE: NONE

FAB. ISOMETRIC DRAWING NUMBER: 00GHA40BR003_UAY00Y-B1

SHEET: 1/1

SPOOL DRAWING NUMBER: 00GHA40BR003_UAY00Y-B1_SP-002

SERIAL NUMBER: AZUM012

A4 (210 x 297mm/mm)

WELD TABLE JOINT NO.	MAT'L	SIZE	THK.	WELD TYPE	NDE TABLE RT	UT	MT	PT	VT	HT	PMI	PWHT (Y/N)	WPS NO.	REMARK
4A	C/S	6"	7.11T	BW	100%	-	-	-	100%	-	-	N	SH-0101-GF-18	-
6	C/S	6"	7.11T	BW	-	100%	-	-	100%	-	-	N	SH-0101-GF-18	SKID
3	C/S	OD256.6	6.00T	FIL	-	-	-	-	100%	-	-	N	SH-0101-GF-18	-
4	C/S	OD256.6	6.00T	FIL	-	-	-	-	100%	-	-	N	SH-0101-GF-18	-
5	C/S	OD256.6	6.00T	FIL	-	-	-	-	100%	-	-	N	SH-0101-GF-18	-

WELD TABLE JOINT NO.	MAT'L	SIZE	THK.	WELD TYPE	NDE TABLE RT	UT	MT	PT	VT	HT	PMI	PWHT (Y/N)	WPS NO.	REMARK

EXPLANATION FOR WELD TABLE AND NDE TABLE

RT=RADIOGRAPHIC EXAMINATION, UT=ULTRASONIC EXAMINATION, MT=MAGNETIC PARTICLE EXAMINATION, PT=LIQUID PENETRATION EXAMINATION, VT=VISUAL EXAMINATION, HT=HARDNESS TESTING, PMI=POSITIVE MATERIAL IDENTIFICATION,**.*T: NOMINAL WALL THK., M**.*: MINIMUM WALL THK.

WELD TYPE: BW=BUTT WELD, O-LET= BRANCH WELD(WELDOLET, SOCKOLET, ...), SW=SOCKET WELD, GW=GROOVED(OR W/ FILLET) WELD, FIL=FILLET WELD, SEAL=SEAL WELD, TACK=TACK WELD, THRD=THREADED JOINT, HOLE= HOLE WITHOUT WELDING(RT HOLE, ...), - = NO MAIN WELDING

PARTS	A	MAT'L INSP.(M/K,C/T)	B	FIT-UP	C	WELDING	D	PWHT	E	NDE	F	FINAL INSP.
PD	H		H		H		H				H	
QC	H		H		H		H		H		H	
CUSTOMER												
RECORD NO.												